Check for updates

IET Circuits, Devices & Systems

Research Article

Design of ternary logic gates and circuits using GNRFETs

ISSN 1751-858X
Received on 30th September 2019
Revised 19th March 2020
Accepted on 24th June 2020
E-First on 26th October 2020
doi: 10.1049/iet-cds.2019.0427
www.ietdl.org

Badugu Divya Madhuri[1] ✉, *Subramani Sunithamani*[1]

[1]*Electronics and Communication Engineering Department, Koneru Lakshmaiah Education Foundation, Guntur, Andhra Pradesh 522502, India*
✉ *E-mail: divyamadhuri.badugu@gmail.com*

Abstract: In this study, the design of digital logic gates and circuits in ternary logic is presented. The ternary logic is observed to be a better alternative to the traditional binary logic because it offers faster computations, smaller chip area, and lesser interconnects. Thus, it allows designing the low-complex, high-speed, and energy-efficient circuits in future digital design. A novel technique is proposed to design the ternary logic gates using multi-threshold graphene nanoribbon field-effect transistors (GNRFETs). The GNRFET threshold voltage is controlled by the width of the graphene nanoribbon, which is defined by the dimer lines number. Three different inverters are designed namely standard, positive, and negative inverters along with the basic and universal logic gates. Additionally, the ternary half adder and full adder are proposed that further helps to design the complex arithmetic circuits. All the proposed ternary logic circuits have been extensively simulated in SPICE for functional verification and performance analysis. The performance of the proposed ternary logic circuits is compared with the existing designs presented in the literature. The comparison results show that the propagation delay and circuit area of GNRFET-based circuits are reduced with an average of 41.3 and 64%, respectively, than the existing ternary circuits.

1 Introduction

In general, the digital calculations are carried out by two-valued binary logic. In the recent days, ternary logic has gained considerable attraction because of its huge advantages over binary logic such as large bandwidth, reduction of interconnect length, smaller chip area, faster arithmetic, and logical operations [1–3]. In ternary logic, the logic states 0, 1, and 2 represent low, middle, and high, respectively. For the comparison between binary and ternary logic, a 32×32 bit signed digit multiplier is compared in [3]. The three-stage full adders with binary-tree addition schemes are used to perform multiplication. The results show that the ternary logic multiplier reduces the power consumption and chip area up to 50% compared to the binary multiplier. Thus, the ternary logic provides better performance over the binary logic. A detailed study on the ternary logic complementary metal-oxide semiconductor (CMOS) circuits is presented in specialised writing [4, 5].

The design of ternary logic gates primarily requires the multi-threshold devices. In CMOS technology, the multi-threshold devices can be implemented using the body bias effect. However, during the fabrication process, providing various bias voltages to the body terminals of metal-oxide semiconductor (MOS) transistor is a difficult task. Moreover, the scaling of MOS transistors in nanometre regime has raised many difficulties such as high-power density, large leakage current, and complex interconnect structures. Therefore, for the design of ternary logic gates different novel devices are presented in the literature using quantum-dot gates [6], reversible logic gates [7], and single-electron transistor integrated circuits [8]. In particular, graphene-based nano transistors have captivated significant consideration for the design of ternary logic gates because of its large mean-free path, high mobility, and ballistic carrier transport [9, 10].

In carbon nanotube field-effect transistors (CNTFETs), the threshold voltage can be altered by changing the tube diameter [11, 12]. Using multi-threshold CNTFETs, the ternary logic gates are designed in [13]. In this work, the authors presented the ternary logic gates along with half adder and multiplier circuits. The performances of these designs are compared with the resistive-load based CNTFET circuits. It has been observed that the proposed designs consume low power and delay over the resistive-load CNTFET designs. A novel ternary half adder is designed using CNTFETs by combining both binary and ternary logic gates in [14]. The ternary to the binary decoder is used to implement the half adder, which reduces the circuit complexity. It is demonstrated that the proposed half adder reduces the power and power delay product up to 63 and 66%, respectively. In ternary logic, the CNTFET-based memory cell is designed in [15]. In this design, a buffer is applied for read operation while the transmission gate is utilised for the write operation. It is reported that the CNTFET-based memory cell accomplishes 41.6% savings in chip area over the CMOS logic. There also exist many studies on the design of CNTFET-based ternary logic, yet we proposed our idea to design ternary logic circuits using graphene nanoribbon field-effect transistor (GNRFET).

The properties of graphene nanoribbon (GNR) and carbon nanotube (CNT) materials are compared in Table 1 [16]. It can be observed that the GNR shows superior properties than CNT for the design of the transistor. Moreover, the GNRs provide the effective performance over CNTs as they have smooth edges and fewer defects [17]. The top-down chemical synthesis method presented in

Table 1 Properties of GNR and CNT

Properties	GNR	CNT
fracture strength, GPa	124	45
density, $g \cdot cm^{-3}$	>1.0	1.33
electrical conductivity, $S \cdot cm^{-1}$	10^6	5000
mobility, $cm^2 \cdot V^{-1} \cdot s^{-1}$	2,00,000	1,00,000
thermal conductivity, W/mK	5000	3000

© The Institution of Engineering and Technology 2020

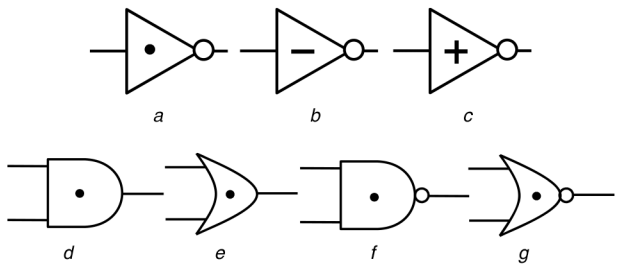

Fig. 1 *Symbols of ternary logic gates*
(a) STI, *(b)* NTI, *(c)* PTI, *(d)* AND, *(e)* OR, *(f)* NAND, *(g)* NOR

Table 2 Truth table of ternary half adder

a	*b*	Sum	Carry
0	0	0	0
0	1	1	0
0	2	2	0
1	0	1	0
1	1	2	0
1	2	0	1
2	0	2	0
2	1	0	1
2	2	1	1

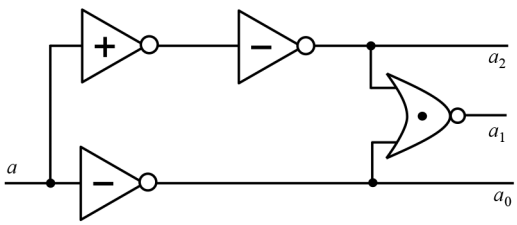

Fig. 2 *Circuit diagram of ternary decoder*

[18] exhibits precise GNRs in various chirality and forms a width <2 nm. The multi-threshold devices can be implemented by utilising GNRs with various widths. Moreover, the transistor current driving capacity can be improved by increasing the graphene channels. Thus GNRFET is the best alternative to the CNTFET as it provides high throughput.

Recently, many studies are going on to design the digital logic circuits using the GNRFETs over conventional devices. Using the GNRFETs, the conventional binary circuits are designed in [19–22] and multi-valued logic circuits are designed in [23, 24]. In [19–22], the digital logic gates and arithmetic circuits are designed in binary logic. The voltage transfer characteristic (VTC) curves and performance parameters are investigated for binary circuits. Using the GNRFETs, the ternary logic circuits are presented in [23] and the quaternary logic circuits are discussed in [24]. It is worth noting that the values of noise margins are very low in quaternary logic circuits and the crosstalk effects are severe; whereas, in ternary logic circuits, the noise margins are high and the effects of crosstalk can be tolerable. For designing the GNRFET based multi-valued circuits, it is essential to study the effect of GNR dimer lines on bandgap and threshold voltage. However, this analysis is not discussed in the literature.

This paper presents a detailed discussion of the design of ternary logic gates and arithmetic circuits using GNRFETs. The mathematical equations to relate the GNR dimer lines, width, bandgap, and threshold voltages are provided. The calculated values of bandgap and threshold voltage for various GNR dimer lines are verified with QuantumATK simulations. The effect of GNR dimer lines on *V–I* characteristics is also discussed. Based on this analysis, the ternary inverters, universal logic gates, and adders are proposed. The VTC curves of ternary GNRFET inverters are discussed. The performances of the proposed GNRFET-based ternary logic circuits are compared with the CNTFET-based circuits.

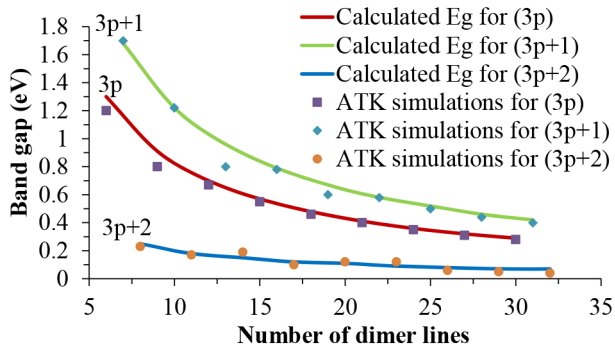

Fig. 3 *Bandgap of GNRs versus dimer lines*

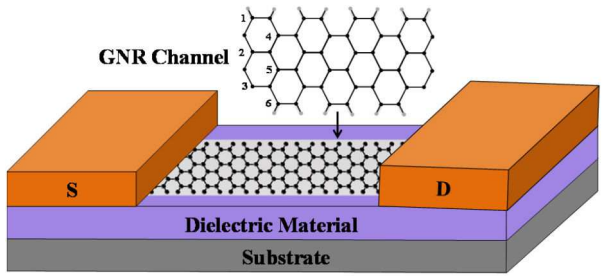

Fig. 4 *Structure of GNRFET (the inset figure shows the GNR channel with six dimer lines)*

The main contributions of this work are fivefold namely:

- A novel method is proposed for the design of ternary logic inverters and basic and universal gates using GNRFETs.
- The ternary half adder and full adder circuits are proposed that further helps to design complex arithmetic circuits.
- Mathematical equations are developed to relate the GNR dimer lines, width, bandgap, and threshold voltage.
- QuantumATK simulations are performed to verify the correctness of the proposed method.
- The proposed circuits are compared with the existing CNTFET circuits.

The rest of the study is structured as follows: the digital computations in ternary logic and truth tables of logic circuits are presented in Section 2. In Section 3, the procedure for the utilisation of GNRFET for implementing the multi-threshold devices is explained. The proposed ternary logic circuits and their result analysis are discussed in Section 4. The conclusions are drawn in Section 5. Finally, the references are cited in Section 6.

2 Review of ternary logic gates

Ternary logic functions can be realised by adding the third value in the binary logic. The operation of ternary logic inverters, basic logic gates, universal logic gates, half adder, and full adder can be defined as follows.

2.1 Ternary logic gates

The basic operation of ternary inverter is defined as

$$\bar{a} = 2 - a \tag{1}$$

where a is the ternary input variable, $a = \{0, 1, 2\}$. Based on the inverter functionality three inverters can exist in the ternary logic: standard ternary inverter (STI); positive ternary inverter (PTI); and negative ternary inverter (NTI). The functionality of STI is given in (1), the NTI produces the output high value when the input is 0, the PTI produces the output high value when the input is either $V_{DD}/2$ or 0. For the remaining states of input, the output becomes 0. The symbolic representation of ternary logic inverters and other logic gates are shown in Fig. 1. The operation of AND gate, OR gate, NAND gate, and NOR gate can be explained by analysing the

© The Institution of Engineering and Technology 2020

17518598, 2020, 7, Downloaded from https://ietresearch.onlinelibrary.wiley.com/doi/10.1049/iet-cds.2019.0427, Wiley Online Library on [04/11/2025]. See the Terms and Conditions (https://onlinelibrary.wiley.com/terms-and-conditions) on Wiley Online Library for rules of use; OA articles are governed by the applicable Creative Commons License

Table 3 Truth table of ternary full adder

a	b	c = 0		c = 1		c = 2	
		Sum	Carry	Sum	Carry	Sum	Carry
0	0	0	0	1	0	2	0
0	1	1	0	2	0	0	1
0	2	2	0	0	1	1	1
1	0	1	0	2	0	0	1
1	1	2	0	0	1	1	1
1	2	0	1	1	1	2	1
2	0	2	0	0	1	1	1
2	1	0	1	1	1	2	1
2	2	1	1	2	1	0	2

input variables a and b, respectively. The operations are given as follows:

$$\begin{aligned} \text{AND}: a \cdot b &= \min(a, b) \\ \text{OR}: a + b &= \max(a, b) \\ \text{NAND}: \overline{a \cdot b} &= \overline{\min(a, b)} \\ \text{NOR}: \overline{a + b} &= \overline{\max(a, b)} \end{aligned} \tag{2}$$

2.2 Ternary half adder and full adder

The logic gates discussed previously can be used to implement complex circuits such as adders, subtractors, and multipliers. In this paper, the half adder and full adder are implemented to verify the working of GNRFET circuits. Table 2 presents the truth table of the ternary half adder and output expressions for sum and carry can be given as

$$\begin{aligned} \text{Sum} &= a_2b_0 + a_1b_1 + a_0b_2 + 1 \cdot (a_1b_0 + a_0b_1 + a_2b_2) \\ \text{Carry} &= 1 \cdot (a_2b_1 + a_2b_2 + a_1b_2) \end{aligned} \tag{3}$$

The value of sum is high when the value of inputs (a, b) is (2, 0) or (1, 1) or (0, 2). Thus, the decoder circuit is the primary block for the implementation of complex circuits in ternary logic. The ternary decoder circuit consists of one input and three outputs and produces the unary functions to the applied input variable. The output of ternary decoder for an input a can be expressed as

$$a_x = \begin{cases} 2, & \text{if } a = x \\ 0, & \text{if } a \neq x \end{cases} \tag{4}$$

where the value of x can be 0, 1, or 2. The decoder circuit shown in Fig. 2 is designed using one PTI, one NOR, and two NTI logic gates.

The ternary logic full adder truth table is shown in Table 3 and output expressions for sum and carry are

$$\begin{aligned} \text{Sum} = {} & a_2b_0c_0 + a_1b_0c_1 + a_0b_0c_2 + a_1b_1c_0 + a_0b_1c_1 \\ & + a_2b_1c_2 + a_0b_2c_0 + a_2b_2c_1 + a_1b_2c_2 \\ & + 1 \cdot (a_1b_0c_0 + a_0b_0c_1 + a_2b_0c_2 + a_0b_1c_0 \\ & + a_2b_1c_1 + a_1b_1c_2 + a_2b_2c_0 + a_1b_2c_1 + a_0b_2c_2) \\ \text{Carry} = {} & a_2b_2c_2 + 1 \cdot (a_2b_1c_0 + a_2b_2c_0 + a_0b_2c_1 + a_1b_1c_1 \\ & + a_1b_2c_1 + a_2b_0c_1 + a_2b_1c_1 + a_2b_2c_1 + a_0b_2c_2 + a_1b_0c_2 \\ & + a_1b_1c_2 + a_1b_2c_2 + a_2b_0c_2 + a_2b_1c_2 + a_0b_1c_2 + a_1b_2c_0) \end{aligned} \tag{5}$$

3 GNRFET as ternary logic device

GNR is a single layer of carbon atoms, where the atoms are packed in a 2D honeycomb lattice structure. The sp^2 bonding in graphene provides high conductivity and tensile strength. The graphene-based transistors are considered as the next-generation electronic devices due to their extraordinary electrical properties such as large mean-free path and large thermal expansion coefficient. The single layer armchair GNR can act as either semiconductor or conductor depending on the dimer lines number (n). The armchair GNR shows the semiconductor property when $n = 3p$ or $n = 3p + 1$ and shows the metallic property when $n = 3p + 2$ [25].

Table 4 Parameter descriptions for threshold voltage

Parameter	Description	Values
e	electron charge	$1.602 \times 10^{-19} C$
$\hbar$	Planck's constant	6.5×10^{-16}eV · s
a	C–C bond distance	0.142 nm
v_f	Fermi velocity	10^6 m/s
n	number of dimer lines	$3p$, α = 0.27
		$3p + 1$, α = 0.4
		$3p + 2$, α = 0.066
		where p is an integer

Table 5 Parameter details of GNR for simulations

Parameter	Value
lattice constant	2.64 Å
hopping amplitude	—
nearest neighbour	2.8e V
next nearest	0.1 eV
third-nearest	0.07 eV
Fermi velocity	1 × 10^6 m/s
channel length	32 nm
gate dielectric thickness	0.95 nm

The threshold voltage of the GNRFET is calculated as

$$V_{\text{th}} = \frac{E_g}{3e} \tag{6}$$

The bandgap of the GNR (E_g) can be stated as

$$E_g = 2|\alpha|\Delta E \tag{7}$$

$$\Delta E = \frac{\hbar v_f \pi}{W} \tag{8}$$

$$W = (n + 1)\frac{\sqrt{3}}{2}a \tag{9}$$

where E_g and W are the bandgap and GNR width, respectively, the remaining parameters are described in Table 4. The bandgap of GNR for different values of dimer lines are plotted in Fig. 3. for the validation of the results, QuantumATK simulations are performed for all corresponding n values. To measure the bandgap, the armchair edge GNR is selected with parameters listed in Table 5. The atomistix toolkit -semiempirical (ATK-SE): extended Huckel calculator is used to evaluate the bandgap with 11 sampling points, Brillouin zone route with 20 points per segment, and all bands above the Fermi level are considered for the calculations. It has

© The Institution of Engineering and Technology 2020

17518598, 2020, 7, Downloaded from https://ietresearch.onlinelibrary.wiley.com/doi/10.1049/iet-cds.2019.0427, Wiley Online Library on [04/11/2025]. See the Terms and Conditions (https://onlinelibrary.wiley.com/terms-and-conditions) on Wiley Online Library for rules of use; OA articles are governed by the applicable Creative Commons License

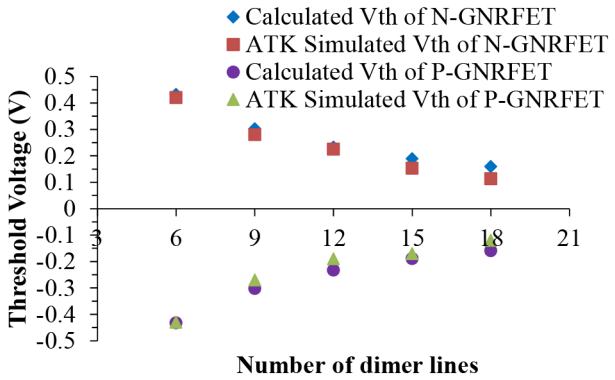

Fig. 5 *Threshold voltages of GNRFETs versus dimer lines*

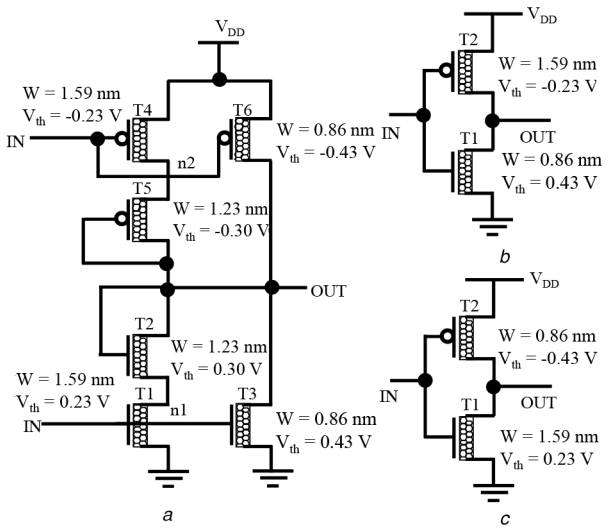

Fig. 6 *GNRFET-based*
(a) STI, ***(b)*** PTI, ***(c)*** NTI

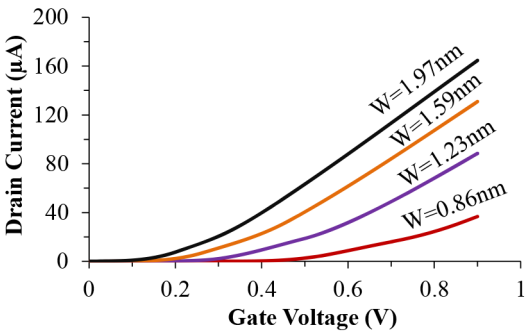

Fig. 7 *Transfer characteristics of GNRFET for different widths*

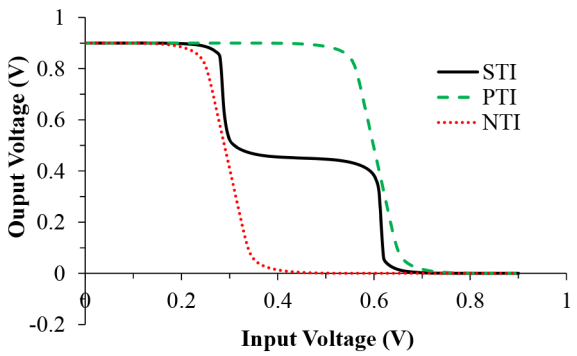

Fig. 8 *VTC curves of the proposed ternary inverters*

been observed that the bandgap is inversely proportional to dimer lines. It also noticed that when $n = 3p + 2$, the GNR bandgap is small and it behaves like a metal.

The GNRFET structure is similar to the traditional MOS field-effect transistor and shown in Fig. 4. GNRFET has three terminals in which heavily doped GNR layers are positioned under source and drain terminals while the undoped GNR sheet is positioned under the gate terminal. In GNRFETs, the source and drain regions are doped with donors or acceptors. Doping the reservoirs with the donors is called as n-channel GNRFET, whereas the doping with acceptors is called as p-channel GNRFET. The detailed discussion on the modeling of n-channel GNRFET is presented in [26].

The width of GNR for six dimer lines is calculated as 0.86 nm from (9) and the threshold voltage is 0.43 V from (6). The threshold voltage is observed to be inversely proportional to the number of dimer lines. This relation is shown in Fig. 5, the calculated values are verified by the simulation results for both n-type and p-type channel GNR transistors. The V_{th} of p-type channel GNRFETs is plotted on the negative axis. It is worth noting that the GNRFET has larger ON current (I_{ON}), larger transconductance (g_m), and larger cut-off frequency (f_T). The simulations are performed to evaluate these parameters for the proposed GNRFET device. The calculated values of I_{ON}, g_m, and f_t for the GNRFET with $n = 12$ are 150 μA, 627 μs, and 159 THz, respectively.

4 GNRFET-based ternary design and operation

This section discusses the GNRFET ternary logic gates and their operations. Then the decoder-based ternary half adder and full adder are also presented. Additionally, the proposed circuits are compared with CNTFET-based circuits in terms of propagation delay, circuit area, and power dissipation.

The GNRFET SPICE model presented in [26] is utilised for the simulation of GNRFET-based ternary logic gates. This SPICE model is used to develop the accurate and circuit-compatible unipolar enhancement-mode GNRFETs for the simulations. In this model, the practical device non-idealities and parasitics are considered such as Schottky-barrier effects at contacts, quantum confinement effects on circumferential and axial directions, GNR charge screening effects, finite scattering mean-free path, back-gate effect, doped drain/source regions, gate resistance, and capacitance. In addition, this model involves the complete trans-capacitance electronic network for high precise transient and dynamic performance with HSPICE simulations.

4.1 Inverter

The STI is designed using six GNRFETs and shown in Fig. 6*a*. The multi-threshold devices are employed by appropriately changing the width. The value of V_{DD} is set to be 0.9; thus the logic 0 represents the voltage level 0 V, logic 1 represents the 0.45 V and logic 2 represents the voltage level 0.9 V. The proposed STI has advantages such as robustness, avoids the use of large resistors, and offers less static power dissipation with low-power consumption. In the SPICE model, for placing the transistors T1, T2, and T3 the value of n is considered to be 12, 9, and 6, respectively, and the GNRFET MOS model is adopted from [26]. From (9), the width of the transistors T1, T2, and T3 is calculated as 1.59, 1.23, and 0.86 nm, respectively, and the threshold voltages are 0.23, 0.30, and 0.43 V, respectively. For p-GNRFETs, the threshold voltages of T4, T5, and T6 are −0.23, −0.30, and −0.43 V, respectively. It is worth evaluating the transfer characteristics of the GNRFETs to observe the switch state of the transistor at different GNR widths. Fig. 7 shows the transfer characteristics of GNRFET. It is observed that the switch state of the transistor is decreased by increasing the channel width.

In the proposed STI, when the voltage of IN is <0.23 V, transistors T1 and T3 turn OFF, T4 and T6 turn ON, and the voltage of OUT is charged to V_{DD}. As the voltage of IN is >0.23 V, T1 and T4 are turned ON while T3 and T6 are turned OFF. The diode-connected transistors T2 and T5 attain a voltage drop from node n2 to OUT and OUT to node n1. Thus, the output voltage becomes logic 1. When the voltage of IN increases >0.45 V, the transistors T4 and T6 are OFF, and T3 is ON thus the OUT voltage is discharged to ground (GND). The VTC curve of the STI inverter is shown in Fig. 8. The transition time of input voltage from low to

© The Institution of Engineering and Technology 2020

17518598, 2020, 7, Downloaded from https://ietresearch.onlinelibrary.wiley.com/doi/10.1049/iet-cds.2019.0427, Wiley Online Library on [04/11/2025]. See the Terms and Conditions (https://onlinelibrary.wiley.com/terms-and-conditions) on Wiley Online Library for rules of use; OA articles are governed by the applicable Creative Commons License

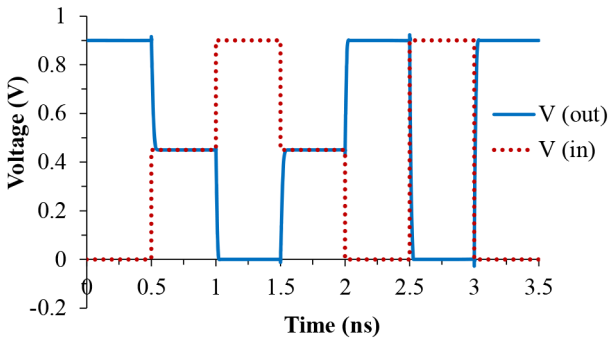

Fig. 9 *Transient response of STI*

Table 6 Propagation delay for STI

Input switching activity	Propagation delay, ps
0→1	11.59
1→2	07.56
2→1	11.40
1→0	10.74
0→2	41.20
2→0	43.74
average (Tp)	21.03

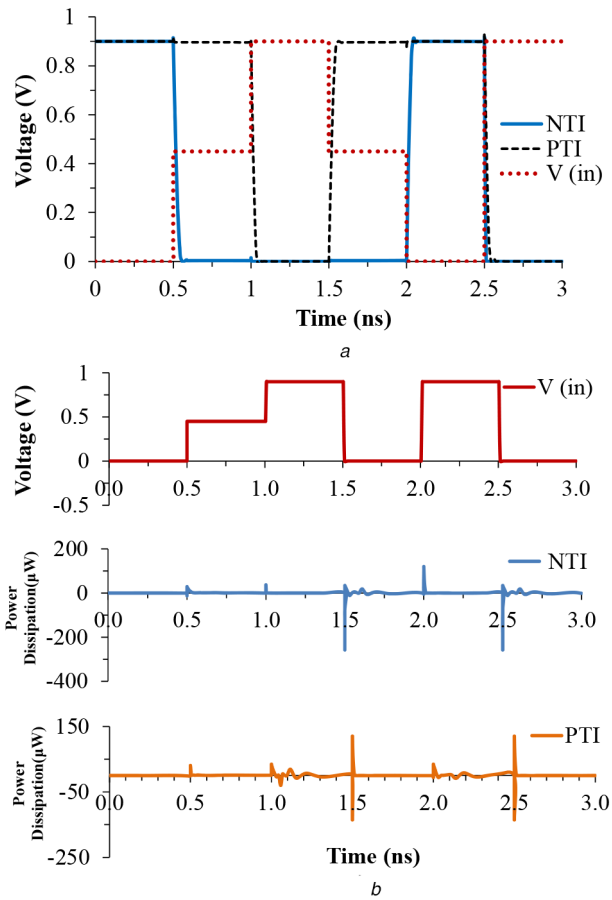

Fig. 10 *Circuit responses*
(a) Transient response of PTI and NTI, ***(b)*** Power dissipations of PTI and NTI

high is assumed to be the same as the transition from high to low. Fig. 9 shows the input and output response of the STI circuit obtained by the HSPICE simulations.

Furthermore, the proposed STI performance is investigated in terms of delay and power dissipation. In digital circuits, delay and power dissipation are considered to be very important metrics. The 50% transition time between input and output response is defined as propagation delay. The propagation delay, i.e. an average of delays during the input transitions 0 to 1, 1 to 2, 2 to 1, 1 to 0, 0 to 2, and 2 to 0 of the proposed STI are shown in Table 6. From the numerical values listed in Table 6, it is observed that delay is high for 0→2 and 2→0 transitions compared to delay obtained for 0→1, 1→2, 2→1, and 1→0 transitions because of faster transmissions from 0 to 1, 1 to 2, 2 to 1 and 1 to 0. The average power dissipation for the proposed STI is 2.76×10^{-6} W.

In the proposed PTI circuit shown in Fig. 6*b*, the threshold voltages of T1 and T2 are 0.43 and −0.23 V, respectively. When the applied IN voltage is <0.45 V, T2 is turned ON and T1 is turned OFF, then the OUT is charged to V_{DD}. As the input voltage exceeds >0.45 V, the output becomes 0 V. Fig. 6*c* shows the circuit diagram of the proposed NTI circuit. The transistors T1 and T2 in the NTI circuit have the threshold voltages of 0.23 and −0.43 V, respectively. As the input voltage becomes <0.23 V, the output is charged to 0.9 V through T2 otherwise it becomes 0 V. The VTC curves of the ternary inverters are shown in Fig. 8. The transient responses and propagation delays of both PTI and NTI are shown in Fig. 10*a* and Table 7, respectively.

The switching power dissipation of PTI and NTI is investigated for different input activities and placed in Fig. 10*b*. The average power dissipation for PTI and NTI is 8.944×10^{-7} and 1.318×10^{-6} W, respectively. It has been noticed that the switching power dissipation of both inverters is higher during the input transition 2 to 0.

4.2 Ternary NAND, NOR gates

The design of universal two-input NAND, NOR ternary logic gates is presented in this section. The circuit representations of universal logic gates are shown in Fig. 11. These configurations consist of ten GNRFETs with three different widths 1.59, 1.23, and 0.86 nm and threshold voltages 0.23, 0.30, and 0.43 V, respectively. The output response of both ternary NAND, NOR logic gates is shown in Fig. 11*c*.

4.3 GNRFET-based ternary half adder and full adder

The GNRFET-based ternary adder circuits are presented in this section. The primary advantage of ternary logic is to use less device count. Since each digit has three different values more information is embedded per bit. As a case study, for an *N*-digit binary adder, the ternary logic has only $[\log_3 2N]$ digits, where [.] represents the ceiling value.

The ternary inverters and other logic gates presented in the previous sections are used to implement the half adder and full adder circuits. Similarly, the same procedure can be applied to design subtractors and multipliers etc. The sum and carry expressions of half adder are mentioned in (3). The ternary half adder is designed by utilising the decoder block shown in Fig. 2 and basic logic gates AND, OR. The circuit of the ternary-based half adder is shown in Fig. 12*a*. The decoders are used to generate the unary function for the applied input and logic gates are used to compute (3). The output response is shown in Fig. 12*b* and confirmed the correctness of the functionality in Table 2. The obtained delays of the ternary half adder at different input switching conditions are $t_1 = 1.680\times10^{-10}$, $t_2 = 2.290\times10^{-10}$, $t_3 = 1.083\times10^{-10}$, and $t_4 = 1.157\times10^{-10}$ s, respectively.

Based on the design procedure of the ternary half adder, the ternary full adder circuit can also be implemented. The circuit diagram and output response of the proposed full adder are presented in Fig. 13. The obtained delays of the ternary full adder at different switching conditions are $t_1 = 6.08\times10^{-10}$, $t_2 = 4.34\times10^{-10}$, $t_3 = 5.87\times10^{-10}$, and $t_4 = 4.35\times10^{-10}$ s, respectively.

The ideal threshold voltages should be 0.225 and 0.675 V. However, the threshold voltage values of the proposed devices are considered as 0.23 and 0.43 V. Alternatively, different threshold voltages can also be selected from (6) without changing the functionality of the circuit. Moreover, the short circuit current from power to the ground is observed in the proposed circuits when input is logic 1. For analysing this current, PTI inverter shown in Fig. 6*b* is considered. From the circuit, it is observed that when the input is logic 1 both n- and p-GNRFETs will turn ON result in

© The Institution of Engineering and Technology 2020

17518598, 2020, 7, Downloaded from https://ietresearch.onlinelibrary.wiley.com/doi/10.1049/iet-cds.2019.0427, Wiley Online Library on [04/11/2025]. See the Terms and Conditions (https://onlinelibrary.wiley.com/terms-and-conditions) on Wiley Online Library for rules of use; OA articles are governed by the applicable Creative Commons License

Table 7 Propagation delay for PTI and NTI

Input switching activity	PTI propagation delay, ps	Input switching activity	NTI propagation delay, ps
1→2	13.90	0→1	21.57
2→1	17.89	1→0	13.75
0→2	21.38	0→2	18.50
2→0	17.84	2→0	21.37
Tp	17.75	Tp	18.79

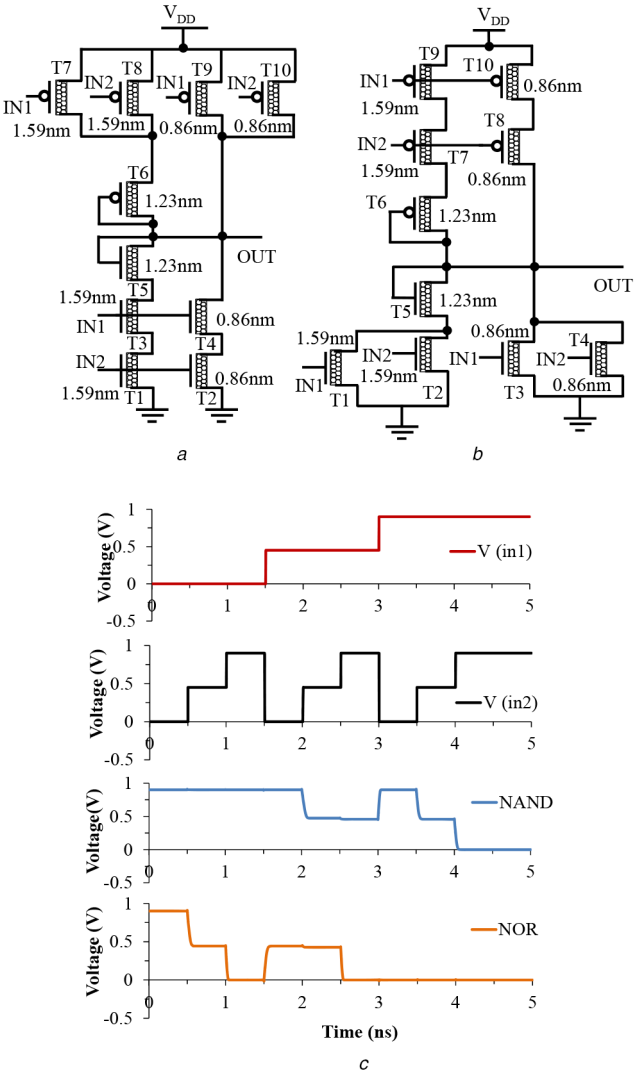

Fig. 11 *Circuit diagrams*
(a) Ternary NAND gate, ***(b)*** Ternary NOR gate, ***(c)*** Transient response of NAND and NOR gates

short circuit current from power to ground. From the results, it has been observed that when input is logic 1, the short circuit current is 666 nA, which is negligible. This happens because when input is logic 1, the n-GNRFET is weak ON. Furthermore, this current can also be reduced by changing the threshold voltage of n-GNRFET transistor to 0.56 V ($n = 7$) and also by reducing the input transition time.

4.4 Comparative study

The performance comparison is analysed between GNRFET- and CNTFET-based ternary circuits to show the effectiveness of the approach. In CNTFETs, the device threshold voltage is altered by varying the CNT diameter. Three different CNTs with diameters 1.487, 0.783, and 1.01 nm are used and their threshold voltages are 0.28, 0.55, and 0.42 V, respectively. Based on these multi-threshold CNTFET devices, the ternary logic gates are implemented using

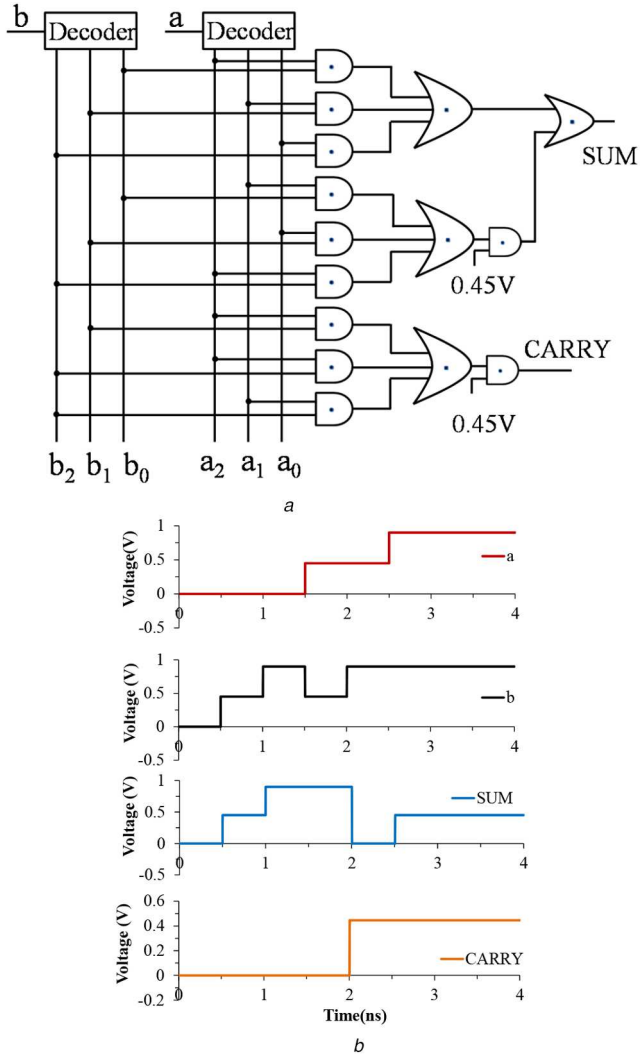

Fig. 12 *Ternary half adder*
(a) Circuit diagram, ***(b)*** Output response

the model in [27]. The propagation delay of the proposed GNRFET ternary circuits is compared with the CNTFET and placed in Fig. 14. The comparative results specify that the GNRFET-based circuits have low-propagation delays compared to the CNTFET with an average reduction of 41.3%. The circuit areas of both circuits are given in Table 8, it is noticed that GNRFET-based circuits occupy less area than CNTFET-based circuits. The power dissipations of the GNRFET- and CNTFET-based circuits are shown in Fig. 15. It is investigated that the GNRFET circuits dissipate high power over the CNTFETs because of large current driving capability. The average increase in power dissipation is observed to be 7.8%. However, still, the GNRFETs are considered to be a promising device for the implementation of ternary logics because of fabrication compatibility due to the planar structure, offer high tensile strength and provide better endurance compared to the CNTFETs. Considering all these aspects, utilising the GNRFETs for ternary logic applications shows better performance over the CNTFETs.

Furthermore, the proposed GNRFET STI performance is also compared with the circuit presented in [23]. From the comparison, it is observed that the proposed STI shows 73.09 and 41.77% improvements in delay and power dissipation over the inverter in [23]. Hence, the proposed circuit design has advantages such as robustness; avoid the use of large resistors and lower power dissipation.

5 Conclusion

The novel ternary logic gates and circuits are presented by utilising the emerging GNRFETs. The threshold voltage of the GNRFET

© The Institution of Engineering and Technology 2020

17518598, 2020, 7, Downloaded from https://ietresearch.onlinelibrary.wiley.com/doi/10.1049/iet-cds.2019.0427, Wiley Online Library on [04/11/2025]. See the Terms and Conditions (https://onlinelibrary.wiley.com/terms-and-conditions) on Wiley Online Library for rules of use; OA articles are governed by the applicable Creative Commons License

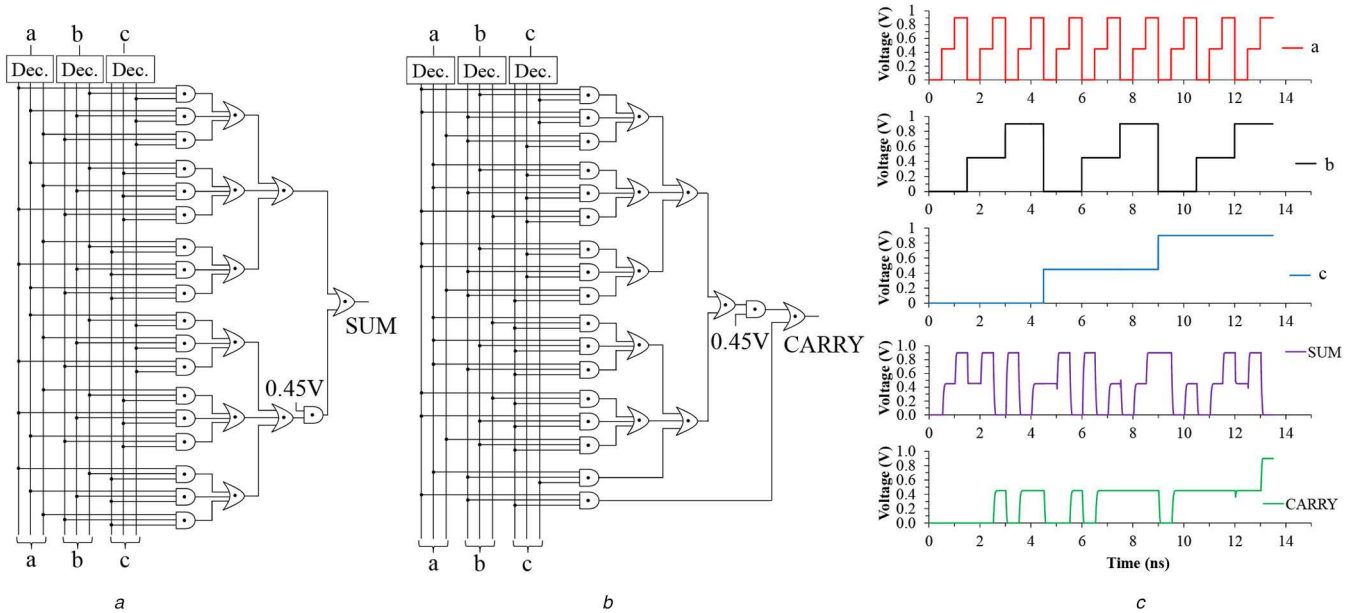

Fig. 13 *Ternary full adder circuit diagrams*
(a) Sum, ***(b)*** Carry, ***(c)*** Output response

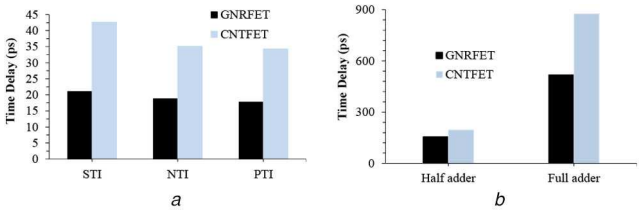

Fig. 14 *Comparisons of transient delays for both GNRFET- and CNTFET-based circuits*
(a) Inverters, ***(b)*** Adders

Table 8 Comparison of circuit area between GNRFET and CNTFET based circuits

Design	GNRFET circuit area, m^2	CNTFET circuit area, m^2
STI	2.35×10^{-16}	6.85×10^{-16}
PTI	7.84×10^{-17}	21.79×10^{-17}
NTI	7.84×10^{-17}	21.79×10^{-17}
half adder	2.92×10^{-15}	07.81×10^{-15}
full adder	8.85×10^{-15}	22.89×10^{-15}

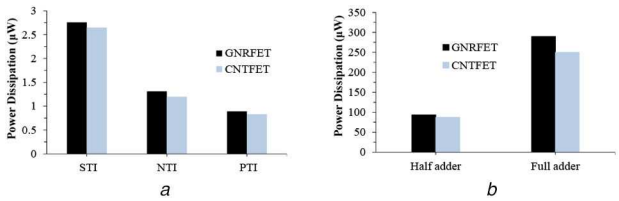

Fig. 15 *Comparisons of power dissipations for both GNRFET- and CNTFET-based circuits*
(a) Inverters, ***(b)*** Adders

was observed to be a function of dimer lines number. Based on this analysis, the multi-threshold GNRFETs are proposed. The ternary logic gates such as inverters and basic and universal gates are implemented using the GNRFETs. As an extension, the ternary half adder and full adder are designed using the decoder block. All the proposed logic circuits are extensively simulated in HSPICE. The results confirmed the correctness of proposed ternary circuits with their respective functions. Additionally, the results of the proposed GNRFET circuits are compared with the CNTFET. The comparative results show that the GNRFET-based STI, PTI, NTI, half adder, and full adder circuits have reduced propagation delay and circuit area with an average reduction of 41.3 and 64%, respectively, while slightly increase in power dissipation of 7.8%. The proposed GNRFET-based designs will place an important role in the implementation of ternary circuits at both gate and circuit levels.

6 Acknowledgments

The authors would like to thank for utilising the Nanoelectronics Simulation Lab sponsored by SERB, DST grant ECR/2016/001070.

7 References

[1] Tabrizchi, S., Panahi, A., Sharifi, F., *et al.*: 'Method for designing ternary adder cells based on CNFETs', *IET Circuits Devices Syst.*, 2017, **11**, pp. 465–470
[2] Jafarzadehpour, F., Keshavarzian, P.: 'Low-power consumption ternary full adder based on CNTFET', *IET Circuits Devices Syst.*, 2016, **10**, pp. 365–374
[3] Raychowdhury, A., Roy, K.: 'Carbon-nanotube-based voltage-mode multiple-valued logic design', *IEEE Trans. Nanotechnol.*, 2005, **4**, pp. 168–179
[4] Shin, S., Jang, E., Jeong, J.W., *et al.*: 'Compact design of low power standard ternary inverter based on OFF-state current mechanism using nano-CMOS technology', *IEEE Trans. Electron Devices*, 2015, **62**, pp. 2396–2403
[5] Ziauddin Jahangir, M., Mounika, J.: 'Design and simulation of an innovative CMOS ternary 3 to 1 multiplexer and the design of ternary half adder using ternary 3 to 1 multiplexer', *Microelectron. J.*, 2019, **90**, pp. 82–87
[6] Karmakar, S., Chandy, J.A., Jain, F.C.: 'Design of ternary logic combinational circuits based on quantum dot gate FETs', *IEEE Trans. Very Large Scale Integr. (VLSI) Syst.*, 2013, **21**, pp. 793–806
[7] Kotiyal, S., Thapliyal, H., Ranganathan, N.: 'Design of a ternary barrel shifter using multiple-valued reversible logic'. 10th IEEE Int. Conf. on Nanotechnology, 2010, Seoul, 2010, pp. 1104–1108
[8] Dan, S.S., Mahapatra, S.: 'Impact of energy quantisation in single electron transistor island on hybrid complementary metal oxide semiconductor– single electron transistor integrated circuits', *IET Circuits Devices Syst.*, 2010, **4**, pp. 449–457
[9] Betti, A., Fiori, G., Iannaccone, G.: 'Strong mobility degradation in ideal graphene nanoribbons due to phonon scattering', *Appl. Phys. Lett.*, 2011, **98**, pp. 1–3
[10] Zhijie, Y., Qingyi, S., Juan, Z.: 'Super tiny nanoscale graphene nanoribbon field-effect transistor', *Chin. J. Phys.*, 2019, **59**, pp. 572–577
[11] Moaiyeri, M.H., Doostaregan, A., Navi, K.: 'Design of energy-efficient and robust ternary circuits for nanotechnology', *IET Circuits Devices Syst.*, 2011, **5**, pp. 285–296
[12] Tabrizchi, S., Taheri, M., Navi, K., *et al.*: 'Novel CNFET ternary circuit techniques for high-performance and energy-efficient design', *IET Circuits Devices Syst.*, 2019, **13**, pp. 193–202
[13] Lin, S., Kim, Y., Lombardi, F.: 'CNTFET-based design of ternary logic gates and arithmetic circuits', *IEEE Trans. Nanotechnol.*, 2011, **10**, pp. 217–225
[14] Sahoo, S.K., Akhilesh, G., Sahoo, R., *et al.* 'High-performance ternary adder using CNTFET', *IEEE Trans. Nanotechnol.*, 2017, **16**, pp. 368–374
[15] Lin, S., Kim, Y., Lombardi, F.: 'Design of a ternary memory cell using CNTFETs', *IEEE Trans. Nanotechnol.*, 2012, **11**, pp. 1019–1025

© The Institution of Engineering and Technology 2020

17518598, 2020, 7, Downloaded from https://ietresearch.onlinelibrary.wiley.com/doi/10.1049/iet-cds.2019.0427, Wiley Online Library on [04/11/2025]. See the Terms and Conditions (https://onlinelibrary.wiley.com/terms-and-conditions) on Wiley Online Library for rules of use; OA articles are governed by the applicable Creative Commons License

[16] Dey, A., Bajpai, O.P., Sikder, A.K., *et al.*: 'Recent advances in CNT/graphene based thermoelectric polymer nanocomposite: a proficient move towards waste energy harvesting', *Renew. Sustain. Energy Rev.*, 2016, **53**, pp. 653–671
[17] Majumder, M.K., Kukkam, N.R., Kaushik, B.K.: 'Frequency response and bandwidth analysis of multi-layer graphene nanoribbon and multi-walled carbon nanotube interconnects', *Micro Nano Lett.*, 2014, **9**, pp. 557–560
[18] Wang, X., Dai, H.: 'Etching and narrowing of graphene from the edges', *Nat. Chem.*, 2010, **2**, pp. 661–665
[19] Patnala, M.: 'High performance GNRFET devices for high-speed low-power analog and digital applications'. A thesis submitted to Purdue University, Indianapolis, Indiana, 2019
[20] Ravish Aradhya, H.V., Madan, H.R., Suraj, M.S., *et al.*: 'Design, analysis and performance comparison of GNRFET based 8-bit ALUs'. 2016 IEEE Int. Conf. on Research Advances in Integrated Navigation Systems (RAINS), Bangalore, 2016, pp. 1–6
[21] Mishra, M., Singh, R.S., Imran, A.: 'Performance optimization of GNRFET inverter at 32 nm technology node', *Mater. Today, Proc.*, 2017, **4**, pp. 10607–10611
[22] Chin, H.C., Lim, C.S., Wong, W.S., *et al.*: 'Enhanced device and circuit-level performance benchmarking of graphene nanoribbon field-effect transistor against a nano-MOSFET with interconnects', *J. Nano Mater.*, 2014, **2014**, pp. 1–14
[23] Mahdieh, N., Peiman, K., Maryam, N.: 'High-speed ternary half adder based on GNRFET', *J. Nanoanal.*, 2019, **6**, pp. 193–198
[24] Mahdieh, N., Peiman, K., Maryam, N.: 'A novel design of quaternary inverter gate based on GNRFET', *Int. J. Nanosci. Nanotechnol.*, 2019, **15**, pp. 211–217
[25] Gholipour, M., Chen, Y., Sangai, A., *et al.*: 'Highly accurate SPICE-compatible modeling for single- and double-gate GNRFETs with studies on technology scaling'. 2014 Design, Automation & Test in Europe Conf. & Exhibition (DATE), Dresden, 2014, pp. 1–6
[26] Chen, Y.-Y., Sangai, A., Rogachev, A., *et al.*: 'A SPICE-compatible model of MOS-type graphene nano-ribbon field-effect transistors enabling gate- and circuit-level delay and power analysis under process variation', *IEEE Trans. Nanotechnol.*, 2015, **14**, pp. 1068–1082
[27] Deng, J., Wong, H.-S.P.: 'A compact SPICE model for carbon-nanotube field-effect transistors including nonidealities and its application part I: model of the intrinsic channel region', *IEEE Trans. Electron Devices*, 2007, **54**, pp. 3186–3194

© The Institution of Engineering and Technology 2020

17518598, 2020, 7, Downloaded from https://ietresearch.onlinelibrary.wiley.com/doi/10.1049/iet-cds.2019.0427, Wiley Online Library on [04/11/2025]. See the Terms and Conditions (https://onlinelibrary.wiley.com/terms-and-conditions) on Wiley Online Library for rules of use; OA articles are governed by the applicable Creative Commons License